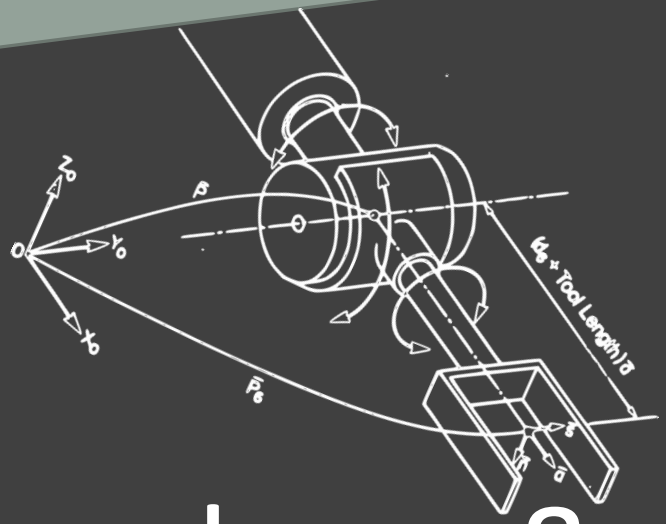

ICT Academy & Ionic3DP

Presents

Introduction to Robotics

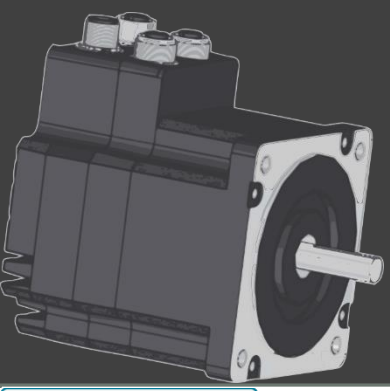

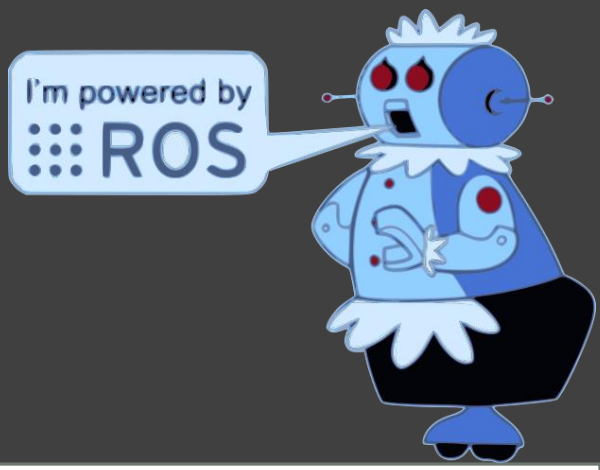

ICT ACADEMY KERALA

IONIC3DP EDUCATION

www.ionic3dp.com
www.ionic3dpedu.com
www.ictkerala.org

Introduction to Robotics is a 13 session live instructor driven program organised by ICT Academy Kerala. The total duration for the course is 35 hours.

Who is this for? For anyone planning to pursue a career or higher education in the field of Robotics. This would also be an excellent program for students who are planning their final year project or are generally interested in this field.

What is the course like? It will run over live online sessions covering demonstrations, hands-on exercises and case-studies all the way from the famous Asimo robots to the Stiquito the DIY 6 legged running robot. The course is fast paced covering Kinematics, Manipulators, Programming, CAD and Robot Operating System (ROS). Towards the end of the course, there is a special tear down session where students experience first-hand functioning of 3D printers, laser cutters etc…

Prerequisites? There are None

Introduction to Robotics course is a mandatory pre-condition course for the Advanced Robotics Program which covers hands-on lab activities such as building robotic manipulators, 3D printers and biped robots in your respective colleges.

Sessions:

1 - Introduction to Robotics, Ethics of Robotic applications
2 - Types and Case studies of Robotic system Locomotion. Trigonometry - a brush up
3 - Microcontrollers, Sensors
4 - Microprocessors, Python basics and Assessment
5 - Manipulators - a detailed study, Functioning of Crane (3D printed pick and place manipulator)
6 - End Effectors, applications of robotics in industries
7 - Cartesian Co-ordinate systems, Frame transformations and rotations, 3D geometry space.
8 - Understanding Machine codes or CAD/CAM codes (G-Codes)
9 - Movement and Trajectory mapping, Belt driven systems
10 - Robot operating system (ROS) an introduction with a hands on example
11 - Introduction to Design (Tinkercad and Fusion360)
12 - Open loop based systems (Understanding the 3 axis machines - teardown)
13 - Types of motion systems (Belt, lead, hydraulic, pneumatic and rack and pinion), building a single axis belt driven actuator.

Ionic3DP is a Singapore based 3D Printing and Manufacturing company. We provide patented and quality 3D printers for industry and education. We also have an educational initiative in Singapore, India, China and Oman.

Hurry up and register for the program through your college.

Francis Regan
CEO, Software and Firmware

Feng Xuming
Co-founder, Manufacturing

Greaton Jojo
R&D Lead